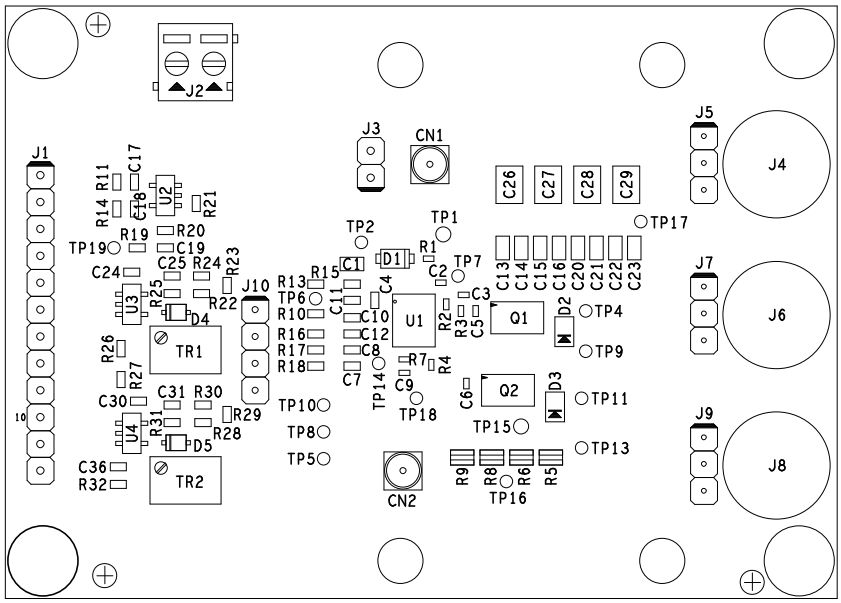

"C" holes must remain open after solder phase
When THT components aren't mounted yours holes must remain open after solder phase

REVISION DATE								

APMS Group ITALY	Description: ASSEMBLY DRAWING	Symbol: EVLSTDRIVEG212	Group

ALL RIGHTS STRICTLY RESERVED. REPRODUCTION OR ISSUE TO THIRD PARTIES IN ANY FORM WHATEVER IS NOT PERMITTED WITHOUT WRITTEN AUTHORIZATION FROM STMicroelectronics.

TOLERANCE UNLESS NOTED
UNIT=MM

	0 <10	>10 <50	>50 <200	>200	ANG. LES.
linear					
midle	±0.1	±0.2	±0.3	±0.5	±1°
accurate	±0.05	±0.1	±0.15	±0.25	±30°

ISO | SCALE: 1.5 : 1 | REV. 1.0

Material

Treatment and surface finishing

Drawn M. RIGO	date 09-June-2025
Approved	date