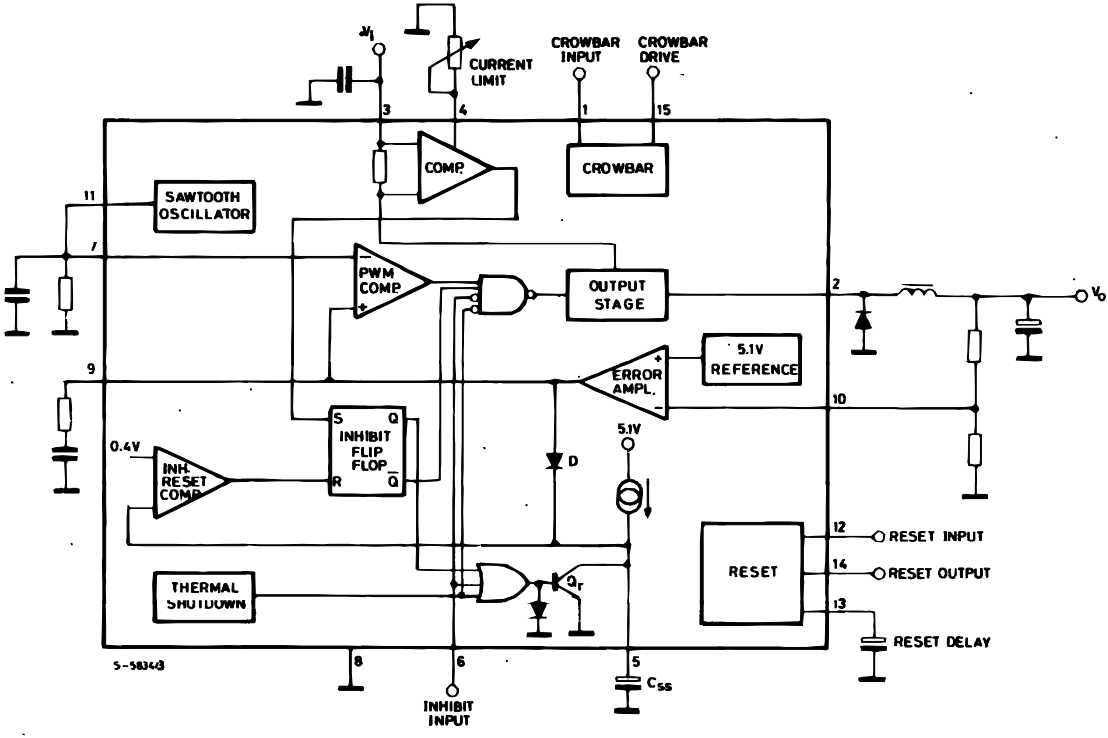
V_I
CURRENT LIMIT
CROWBAR INPUT
CROWBAR DRIVE
3
4
1
15
COMP.
CROWBAR
11
SAWTOOTH OSCILLATOR
7
PWM COMP.
OUTPUT STAGE
2
V_o
9
ERROR AMPL.
5.1V REFERENCE
10
S
Q
INHIBIT FLIP FLOP
R
Q
0.4V
INH. RESET COMP.
5.1V
D
12
RESET INPUT
RESET
14
RESET OUTPUT
THERMAL SHUTDOWN
Q_r
13
RESET DELAY
S-58348
8
6
5
C_{SS}
INHIBIT INPUT